# xcite LED Lighting
## Data Sheet

**Order Code:** XCDLAM3ST

XCITE DROP LIGHT ST XCDLA 2W - 6500K - Fixed output - Emergency Self-test



### Features

- Ideal for retrofit of existing emergency fixtures
- Suitable for escape routes and exits
- Reduced maintenance and high performance
- Supplied with LiFePO4 battery

### Construction

- Surface box with suspended legend
- Polycarbonate body
- Operates in maintained and non-maintained mode
- Wire suspension [0 - 750mm]
- Supplied with EURO 4 running man legend
- Integral auto self-test for reduced maintenance, includes a disable function

6500K | 50,000 HOURS | 3YRS WARRANTY | IP20 | IK06 | M3 | LiFePO4

## Technical Data

### General

| | |
|---|---|
| Luminaire Wattage (W) | 2 |
| Weight (kg) | 0.64 |
| Operating Temperature (ta °C) | 5° to 25° |

### Driver

| | |
|---|---|
| Driver Current (mA) | 110 |
| Forward Voltage (V) | 2.68 |

### Electrical

| | |
|---|---|
| Rated Input Current (A) | 0.05 |
| Power Factor (pf) | 0.19 |
| Input Voltage Range (VAC) | 220 to 240 |
| Conductor Size (mm) | 1.5 |
| Terminal Type | 4 pole screw down |

Technical
Stafford Park 12
Telford, Shropshire,
TF3 3BJ

T: +44 (0)1952 292441
E: sales@xciteledlighting.co.uk
W: www.xciteledlighting.co.uk

# xcite LED Lighting

## Data Sheet

**Order Code:** XCDLAM3ST

XCITE DROP LIGHT ST XCDLA 2W - 6500K - Fixed output - Emergency Self-test

### Dimensions

| | |
|---|---|
| Length (mm) | 340 |
| Width (mm) | 45 |
| Depth (mm) | 1000 |

### Line Drawing

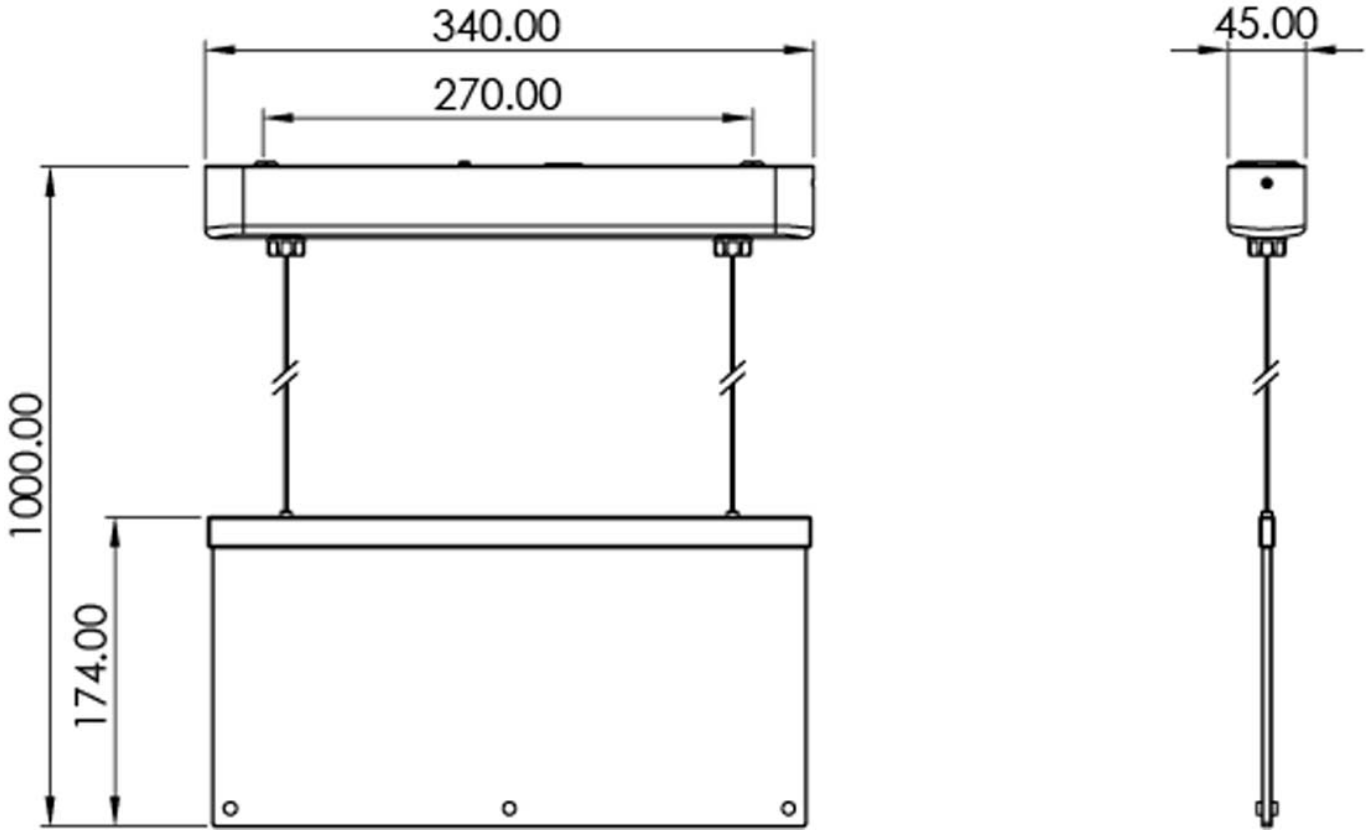


Technical
Stafford Park 12
Telford, Shropshire,
TF3 3BJ

T: +44 (0)1952 292441
E: sales@xciteledlighting.co.uk
W: www.xciteledlighting.co.uk