xcite LED Lighting
Data Sheet

Order Code: XCEBAM3ST

XCITE EXIT BOX ST XCEBA 3W - 6500K - Fixed output - Emergency Self-test



Features

- Ideal for replacement of linear fluorescent fixtures
- Suitable for escape routes and exits
- 20mm conduit top and rear cable entries BESA for wall fix
- Reduced maintenance and high performance
- EURO 1, 2 and 3 running man legend also available [sold separately]

Construction

- Steel body
- Maintained or non-maintained available
- Supplied with EURO 4 running man legend
- Integral auto self-test for reduced maintenance, includes a disable function
- Supplied with LiFePO4 battery

6500K | 50,000 HOURS | 3YRS WARRANTY | IP20 | IK06 | LiFePO4

Technical Data

General

Luminaire Wattage (W)	3
Weight (kg)	1.55
Operating Temperature (ta °C)	5° to 25°

Driver

Driver Current (mA)	340
Forward Voltage (V)	2.57

Electrical

Rated Input Current (A)	0.05
Power Factor (pf)	0.25
Input Voltage Range (VAC)	220 to 240
Conductor Size (mm)	1.5
Terminal Type	4 pole push down

Technical
Stafford Park 12
Telford, Shropshire,
TF3 3BJ

T: +44 (0)1952 292441
E: sales@xciteledlighting.co.uk
W: www.xciteledlighting.co.uk

xcite LED Lighting

Data Sheet

Order Code: XCEBAM3ST

XCITE EXIT BOX ST XCEBA 3W - 6500K - Fixed output - Emergency Self-test

Dimensions

Length (mm)	392
Width (mm)	190
Depth (mm)	60

Line Drawing

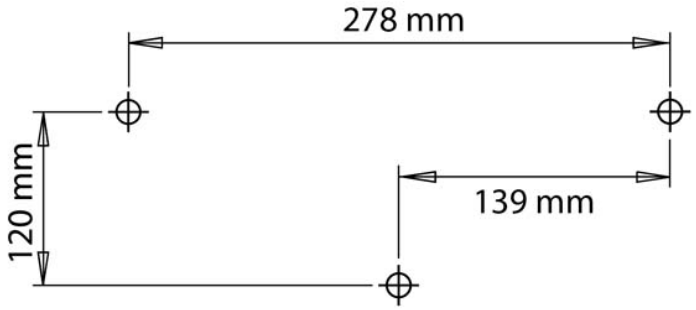

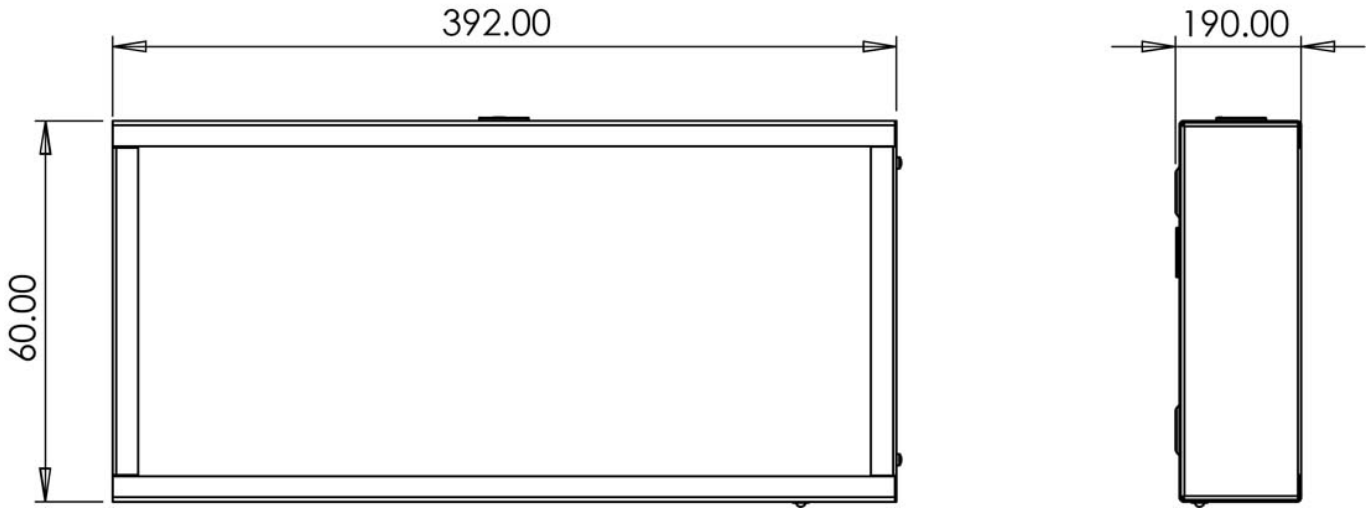

Technical
Stafford Park 12
Telford, Shropshire,
TF3 3BJ

T: +44 (0)1952 292441
E: sales@xciteledlighting.co.uk
W: www.xciteledlighting.co.uk